stryker

Osteosynthesis

Monotube Triax
External Fixation System

Operative Technique

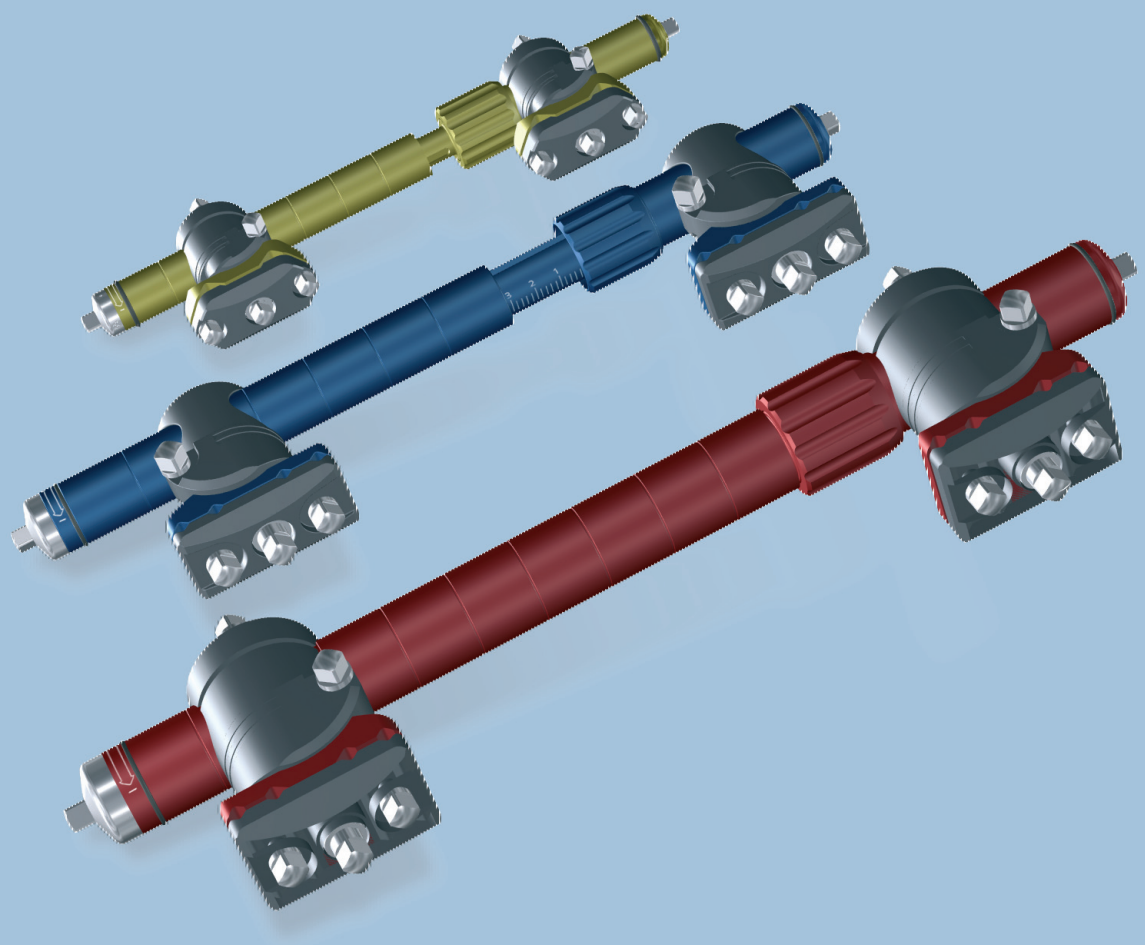

Introduction

Introduction

Components and Instruments

The Monotube Triax External Fixation System offers simple and versatile frame options that meet todays clinical needs.

Key system components include:

- Dynamic Monotubes (Red, Blue, Yellow)
- Carbon Monotubes (Red, Blue, Yellow)
- Standard Pin Clamps
- Single Pin Clamps
- Tube-to-Tube Clamps
- T-adapter
- Apex Pins (Self-Tapping, Blunt, or Self Drilling).

Instruments include:

- T-Handle (for locking the system)
- Torque Wrench (colour-coded)
- Dynamisation Wrench (used to open/shut the dynamisation collar)
- External Compression/Distraction Device for use with Triax Carbon Tubes
- Fracture Reduction Handles.

Indications

- Treatment of all fractures of the long bones and pelvis
- Joint Arthrodesis
- Limb Lengthening
- Angular Corrections
- When other methods of fracture fixation are not appropriate
- Osteotomies
- Delays in Consolidation.

Contraindications

- If uncertainty exists with regard to the anatomic location of the neurovascular structure due to post-traumatic destruction, the device should be used with extreme caution. Under these circumstances, the pins should be inserted under direct vision
- Local sepsis is also a relative contraindication to the application of this device
- The presence of some internal fracture fixation devices
- Psychiatric Patients
- Osteoporotic Bone
- Pre-emptive medical condition.

Professor David Seligson, M.D.
Department of Orthopaedic Surgery
University of Louisville
Health Science Centre
Louisville, KY 40292

Professor José Cañadell
Chairman, Department of Orthopaedic Surgery and Traumatology
Clinica Universitaria De Navarra
Pamplona, Spain 31080

Professor Francisco Forriol
Chairman, Orthopaedic Research Laboratory
Department of Orthopaedic Surgery and Traumatology
Clinica Universitaria De Navarra
Pamplona, Spain 31080

This publication sets forth detailed recommended procedures for using Stryker devices and instruments. It offers guidance that you should heed, but, as with any such technical guide, each surgeon must consider the particular needs of each patient and make appropriate adjustments when and as required.

Components

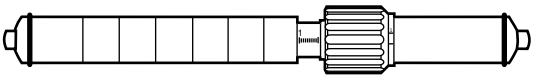

DYNAMIC MONOTUBE

CARBON MONOTUBE

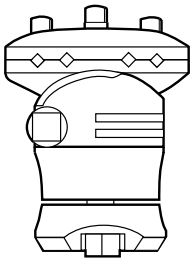

TRIAX
STANDARD
PIN CLAMP

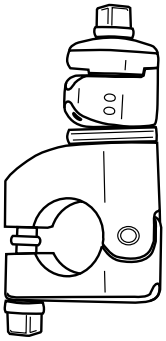

TRIAX SINGLE PIN CLAMP

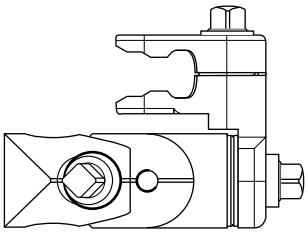

RING TO MONOTUBE
TRIAX TUBE CLAMP

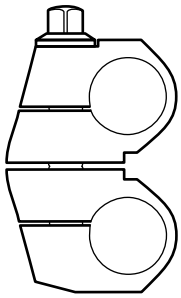

TRIAX TUBE-TO-TUBE CLAMP

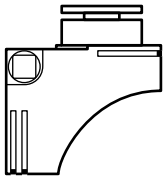

TRIAX
T-ADAPTER

APEX PIN

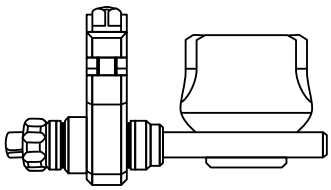

CHARIOT

COMPRESSION/DISTRACTION
DEVICE

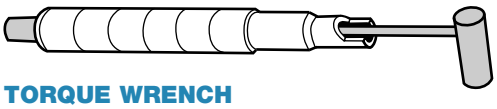

TORQUE WRENCH

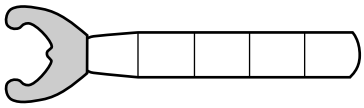

DYNAMISATION WRENCH

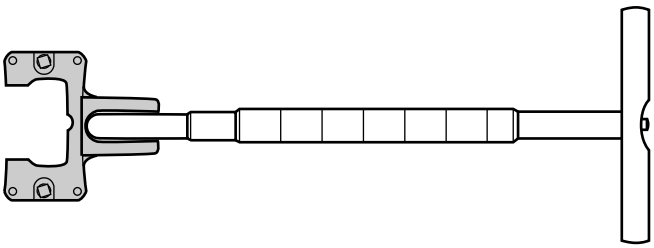

FRACTURE REDUCTION TOOL

Components

DYNAMIC MONOTUBE

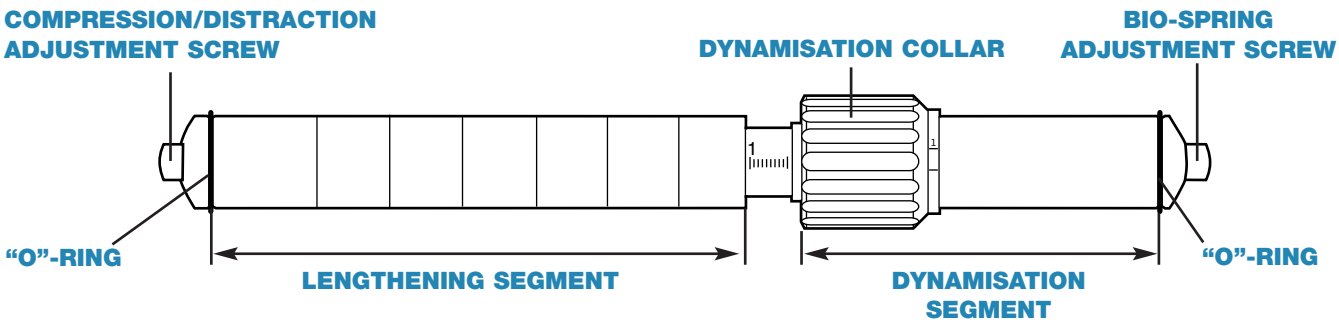

CARBON MONOTUBE

Component Selection

The recommended charts on page 6 can be used to determine proper frame components for the fracture being treated but can of course vary from one clinical situation to another. The type of tube selected is determined by:

- Location/type of fracture
- Patient's weight (Dynamic Tubes only)
- Length of tube required
- Dynamisation requirements.

Dynamic Monotube Triax

Dynamic Tubes include an internal compression/distraction mechanism, which is useful in lengthening procedures and to adjust fracture reductions. The long portion of the tube is referenced as the Lengthening Segment. The shorter portion is called the Dynamisation Segment and includes two adjustable dynamisation features: Biocompression and Adjustable Bio-Spring. These tubes are available in three colour-coded sizes: Yellow, Blue, and Red. Use Chart No1 (page 6) to select the proper tube size, based on fracture type and patient's weight.

Triax Carbon Tubes

Carbon Tubes should be used when dynamisation is not desired, or when a radiolucent tube is helpful as in the case with distal radius and proximal tibial fractures. This economical option also comes in the same three diameter sizes and a variety of lengths as presented in Chart No 2 (page 6). The hollow carbon tube comes complete with end caps, which prevent the pin clamps from sliding off the tube during frame application.

Components

Chart No 1

Selecting Proper Dynamic Monotube Size (Yellow, Blue, or Red)

Patient's Weight in Kg (1kg=2.2lb)

		10	20	30	40	50	60	70	80	90	100
Forearm	Ulna	Y	Y	Y	Y	Y	Y	Y	B	B	
Forearm	Radius	Y	Y	Y	Y	Y	Y	Y	Y	Y	
Forearm	Colles	Y	Y	Y	Y	Y	Y	Y	Y	Y	
Humerus	Simple/stable	Y	Y	Y	B	B	B	B	B	B	
Humerus	Oblique/comminuted/unstable	Y	Y	B	B	B	B	B	B	B	
Femur	Simple/stable	Y	B	B	B	R	R	R	R	R	
Femur	Oblique/comminuted/unstable	Y	B	B	R	R	R	R	R	R	
Tibia	Simple/stable	Y	Y	B	B	B	B	B	B	R	
Tibia	Oblique/comminuted/unstable	Y	B	B	B	B	R	R	R	R	

Y=Yellow tube and clamps B=Blue tube and clamps R=Red tube and clamps

Chart No 2

Monotube Lengths and Pin Options

Tube Colour (Dynamic) End Cap Colour (Carbon)	Dynamic Monotube	Carbon Monotube	Pin Size
Yellow	15mm x 180mm Fully Compressed 15mm x 250mm Fully Distracted	15mm x 150mm 200mm 250mm 300mm	3mm & 4mm
Blue	20mm x 250mm Fully Compressed 20mm x 350mm Fully Distracted	20mm x 200mm 250mm 300mm 350mm	4mm & 5mm
Red	25mm x 320mm Fully Compressed 25mm x 470mm Fully Distracted	25mm x 250mm 300mm 350mm 400mm	5mm 6mm

Operative Technique

Triax Standard Pin Clamp

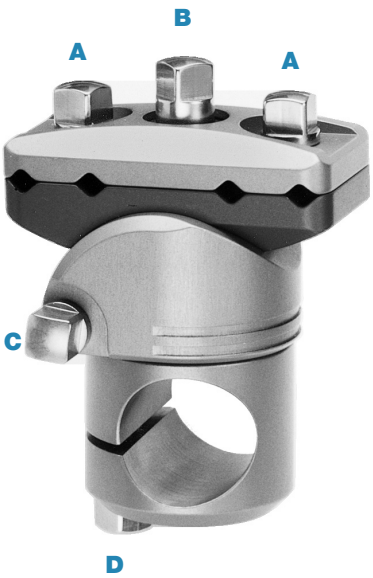

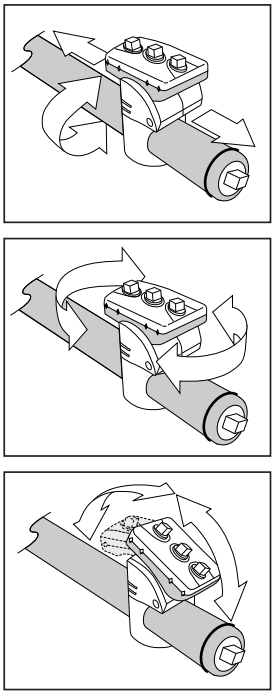

The Monotube Triax Pin Clamp allows independent control of the fracture reduction in three planes. Clamps may be placed anywhere along the length of the tube at virtually any angle, wherever the best bone purchase may be available.

A unique compression sleeve allows for excellent mobility in rotation preventing deviation of the pin clamp while guaranteeing maximum stability.

The two outer square head screws A when tightened hold the pins in the clamp. Each screw can independently lock up to two pins in place. The red and blue Triax Clamps have four pin positions, and the yellow Triax Clamp has two pin positions.

The centre square head screw B allows for +/- 20° degrees of angulation in the sagittal plane.

The side square head screw C allows for 360° of rotation in the coronal plane.

The square head screw D at the bottom of the clamp allows for translation along the length of the tube and for 360° rotation around the axis of the tube.

Note: All square head screws need to be tightened to the appropriate torque to maintain adequate stability using the torque wrench.

Monotube Triax Pin Clamps

Also identified by three colour-coded sizes, the Monotube Triax Clamps each accept a minimum of two half pin diameters as also indicated in Chart No 2. The clamps come in a variety of styles, including Hybrid Clamps, to accommodate even the most challenging fracture pattern.

Note: Blue and Red components have 7mm square head screws and Yellow components have 5mm square head screws.

Triax Single Pin Clamp

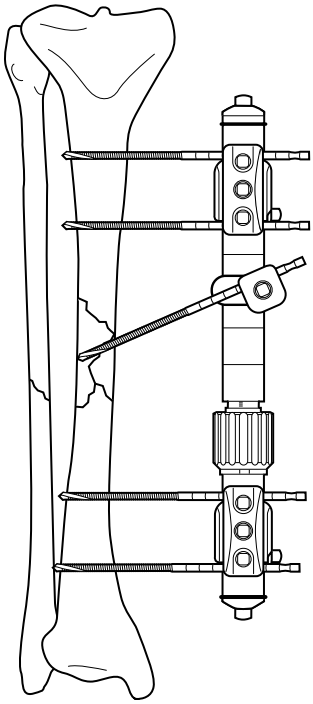

The Monotube Triax Single Pin Clamps are designed for independent pin placement. They allow for capture and stabilisation of fracture fragments. They are also intended for use in pathologies that require non parallel pin position for additional stability of the frame.

The Single Pin Clamp features a snap-fit fixation mechanism which ensures an easy and firm grip to the fixation pins. A serrated interlocking mechanism between the jaws of the pin clamp provides superior rotational locking. A 7mm square head screw allows easy access.

Pins can be placed parallel or convergent to improve stability.

- The Monotube Triax Single Pin Clamps comes in three sizes and accepts the following Apex pins
- Yellow 3/4mm
- Blue 4/5mm
- Red 5/6mm
- Top locking for adjustable control of the pin placement
- The Single Pin Clamp allows 360° of medio lateral rotation
- The square head screw positioned at the bottom of the pin clamp allows for translation along the length of the tube and 360° around the axis of the tube.

Triax Hybrid Frame

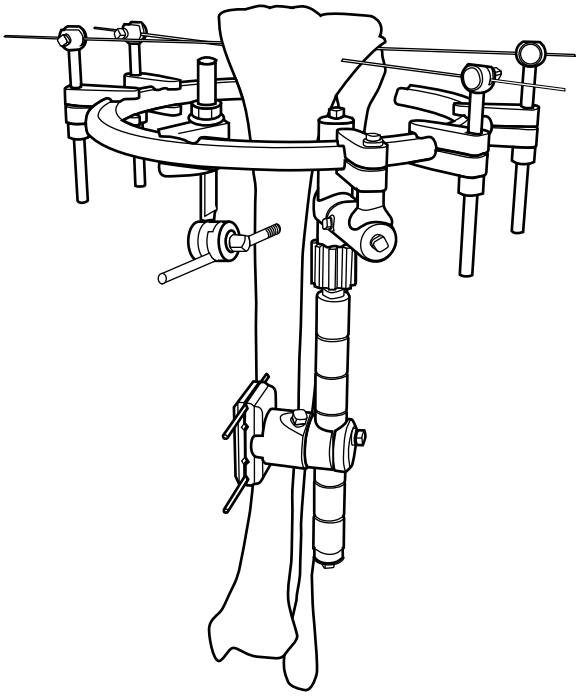

The Monotube Triax can be connected to the TenXor carbon ring by using a ring-to-tube clamp. Such a Triax Hybrid Frame was designed to address C type fracture of the proximal and distal tibia using K-wires. It combines the principles of the circular ring and unilateral frame fixation to better neutralise the forces acting upon the fracture.

The TenXor carbon ring is available in various sizes and the ring-to-tube clamp is available in 2 sizes for blue and red Monotube Triax.

Its main features are:

- Possibility of sliding along the ring in order to determine the best position according to frame configuration
- Integrated snap-fit mechanism for "clicking" the clamp on the ring
- Positioning the clamp inside or outside the ring
- 3 axes of rotation
- 7mm square head locking screws compatible with Hoffmann II and blue/red Monotube Triax wrenches
- Easy access of locking screws
- Manufactured from stainless steel and aluminium

Additional information is available in the TenXor brochure and operative technique.

Triax Tube-to-Tube

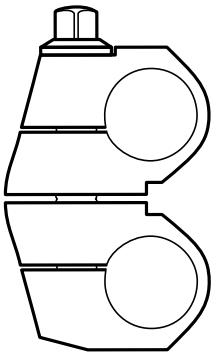

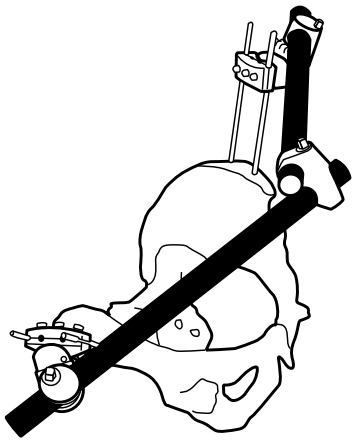

Triax Tube-to-Tube Clamps

These clamps allow connection of Yellow, Blue and Red tubes together to treat complex trauma or pelvic fractures. The clamps are suitable for both Dynamic and Carbon Tubes (Figure 27). Clamps are available in the following configurations:

- RED TO RED
- RED TO BLUE
- BLUE TO BLUE
- BLUE TO YELLOW
- YELLOW TO YELLOW

The clamp consists of two aluminium jaws that hold the tubes and allow 360° of rotation. A single 7mm square head screw positioned at the top of the clamp enables the device to be locked. There are 100 radially serrated teeth between the jaws which allow precise positioning of the tube components. Each tooth movement represents 3.6° of rotation.

NOTE: This device cannot be dismantled.

Triax T-Adapter

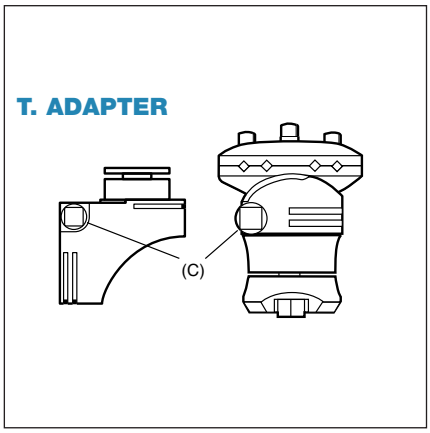

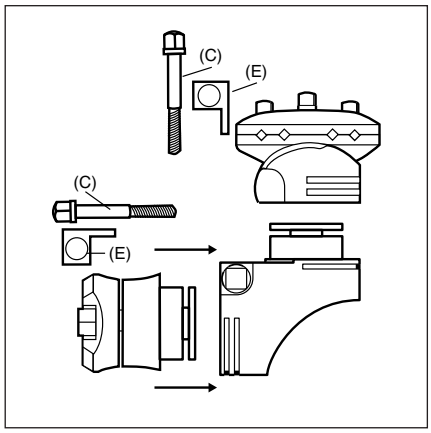

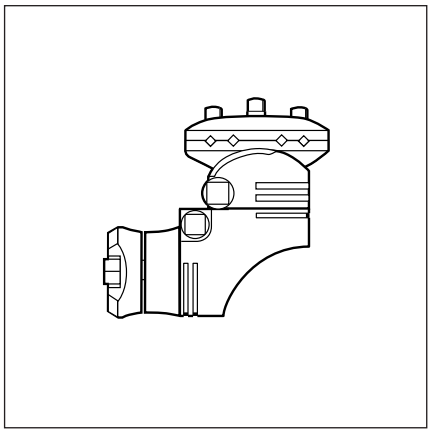

T-Clamps

T-Clamps are beneficial when treating proximal and distal fractures or fractures that pass across a joint. The T-clamp allows for perpendicular placement of pins.

Monotube T-Adapter Assembly

Standard Monotube Triax Clamps can be converted to T-Clamps using the T-Adapter.
Be sure you select the appropriate adapter for the size of clamp to be modified.

Assembly Instructions

1. Select the appropriate T-Adapter and matching Standard Pin Clamp using the chart above.
2. Remove body screw (C) and compression sleeve (E) from T-Adapter with the appropriate Monotube Triax Torque wrench.
3. Remove body screw (C) and compression sleeve (E) from Standard Pin Clamp. Separate pin connector from the tube coupling.
4. Insert T-Adapter into the tube coupling and replace compression sleeve (E). Body screw (C) should be introduced through the recessed portion of the clamp until fully seated and finger tight.
5. Insert pin connector onto T-Adapter and replace compression sleeve (E). Body screw (C) should be introduced through the recessed portion of the clamp until fully seated and finger tight.

NOTE: Body screws and compression sleeves are exactly alike and will fit in either position. However, if body screws are not started from the recessed side of the clamp, they will not fully seat. In addition, the T-adapter should always be connected to the tube coupling before the pin connector.

T-Adapter	Catalogue	Required Standard Pin Clamp	Catalogue
Yellow (15mm) Blue (20mm) Red (25mm)	5150-4-065 5150-4-070 5150-4-075	Yellow (15mm) Blue (20mm) Red (25mm)	5150-3-065 5150-3-070 5150-3-075

Operative Technique

Frame Application with Dynamic Monotube Triax

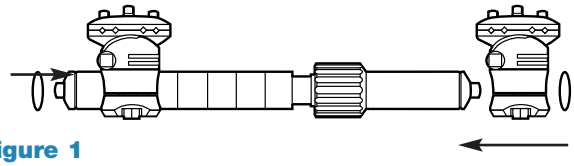

Figure 1

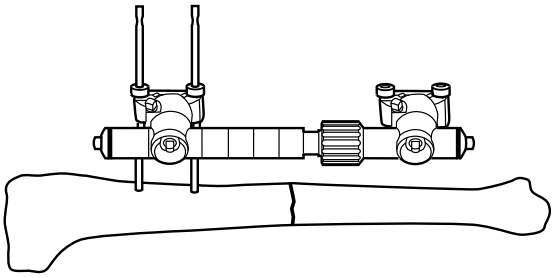

Figure 2

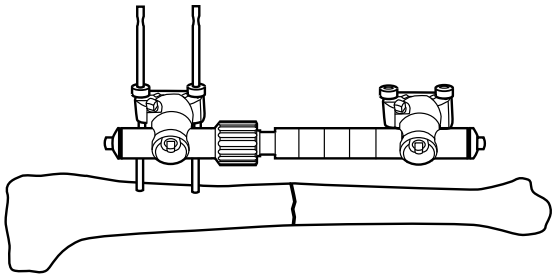

Figure 3

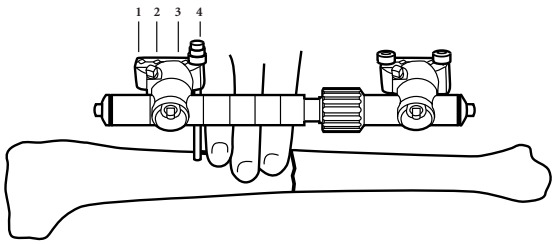

Figure 4

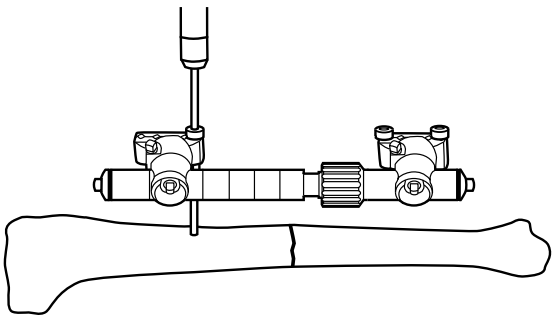

Figure 5

Preparation

To prepare for application of the frame, remove "O"-Rings, and place selected clamps on the tube. Once the clamps are in place, replace the "O"-Rings to prevent the clamps from sliding off the frame during the procedure (Figure 1).

Positioning of the Dynamic Tube

The Dynamic Tube may be placed with the dynamisation segment positioned either proximally or distally to accommodate any fracture pattern and provide a variety of pin placement options (Figure 2).

The tube should be distracted to 1cm before use. The dynamisation collar should be locked before placement (See figure 12 and 13).

Pin Placement

Once a gross reduction is achieved, the first Apex self-tapping, self-drilling pin†, usually considered the most critical, is placed approximately three fingerbreadths proximal or distal to the fracture, depending on surgeon preference. Care should be taken to see that the first pin is placed properly in the best quality bone. Insert the Predrill Assembly through the clamp and into hole No 4 (Figure 4). (The holes in the clamp are referred to as holes No 1-No 4; the hole closest to the fracture is always hole No 4). After making a small incision, split the soft tissue with forceps. Insert the Predrill Assembly through the incision and push down until sleeve is perpendicular to and touches the bone. Holding the sleeve in this position, insert the self-drilling, self-tapping Apex Pin (Figure 5).

†If non-self-drilling self-tapping Apex Pins are preferred, see page 8 of this technique for the pre-drilling protocol.

Frame Application with Dynamic Monotube Triax

Turn the drill brace counterclockwise four to five turns. The Apex pin tip will mark the cortex and prevent slipping of the pin. Turn the drill brace clockwise, driving the Apex Pin through the first cortex†. Resistance will be felt as the tip of the pin begins to penetrate the second cortex. The pin should be advanced until both cortices are fully engaged. Remove the drill brace from the pin.

Place second pin in hole No 1, utilising the same technique (Figure 6).

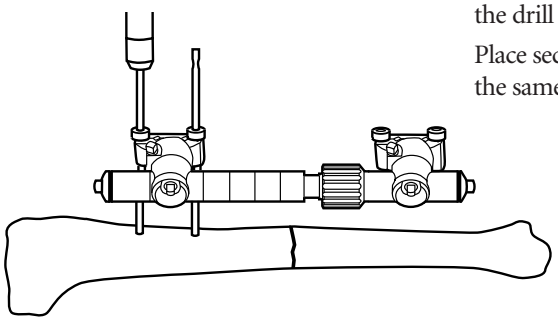

Figure 6

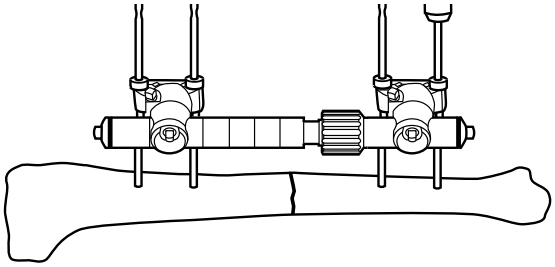

Figure 7

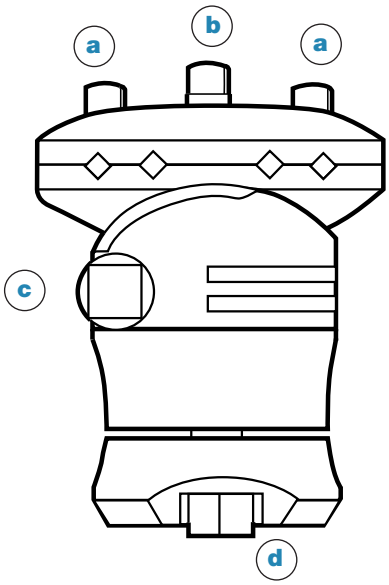

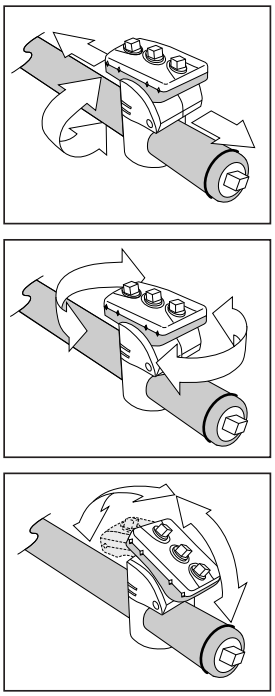

Figure 8

NOTE: It is important that all adjustment screws should be positioned outward and within easy reach to facilitate adjustment, tightening and final locking of the fixator. It is also important that the Tube should be distracted at least one centimetre prior to application allowing for compression/distraction and fine-tuning of the reduction postoperatively. Care should be taken that the collar should always be closed prior to dynamisation application.

Using the same technique for the opposite side of the fracture, place the third pin at least three fingerbreadths from the fracture, again taking care to see that the pin is placed properly in the best quality bone.
A third incision is made and an additional Predrill Assembly is inserted through hole No 1 in the Pin Clamp. The procedure is repeated for the final pin in hole No 4 (Figure 7).

Although pins are typically placed in holes No 1 and No 4, when using multiple pin clamps, holes No 2 and No 3 can be used, if necessary.

†NOTE: Always use Apex Pins with the Monotube Triax system.

Pin Clamp Function

It is important to review the function of the Pin Clamps. The two outer screws (A) on the clamp face, when tightened, hold the clamp to the pins. The centre screw (B) locks +/– 20° of angulation. The side screw (C) locks the 360° rotation of the clamp. The nut on the bottom of the clamp (D) locks the clamp-to-tube connection (Figure 8).

Final Reduction

All Predrill Assemblies are now removed and the proximal pin group is locked into the clamp, which is left loose on the tube.

The tube will now slide freely with the clamps, allowing for final reduction.

Frame Application with Dynamic Monotube Triax

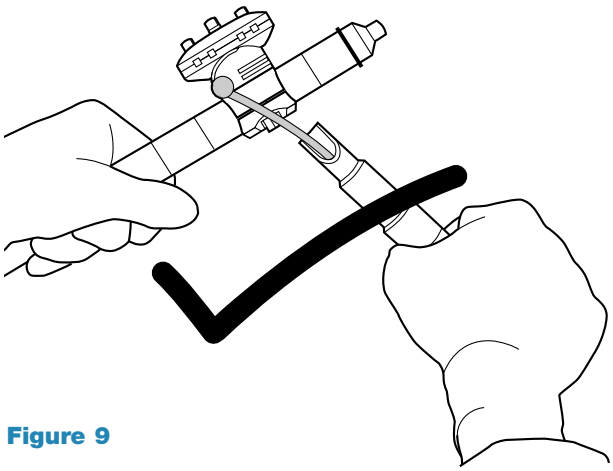

Figure 9

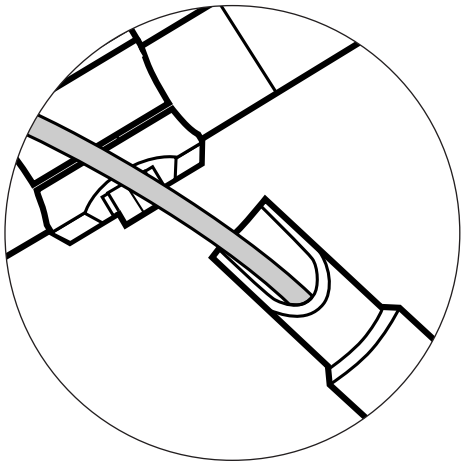

Figure 10

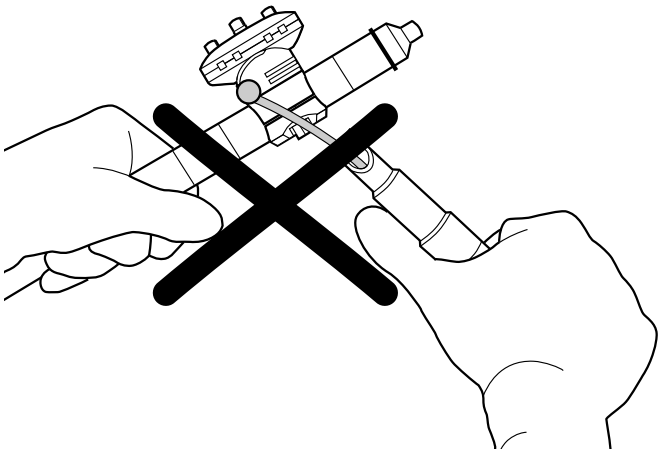

Figure 11

Locking the Fixator

Once an anatomical reduction is achieved, lock the fixator in all planes. The torque wrench should be used after initial tightening to assure all clamps are locked properly. For the Red system, this assures the components are tightened to 11Nm; for the Blue system 9Nm; and for the Yellow 5Nm.

Use of Monotube Torque Wrench

Proper use of the torque wrench is important. Make sure the torque wrench head is fully seated over the clamp screw.

Grip the end of the wrench handle, keeping the thumb in a “fist” position (Figure 9). Tighten the clamp screw only until the silver torque wrench bar contacts the colour-coded handle. When the bar and the wrench handle come in contact, the clamp screw has been tightened to the recommended maximum torque (Figure 10).

Improper placement of the thumb can change the torque level achieved by the wrench. This may result in undertightening of the screws on the clamp (Figure 11).

NOTE: Do not overtighten as this may damage the clamp or torque wrench.

Frame Application with Dynamic Monotube Triax

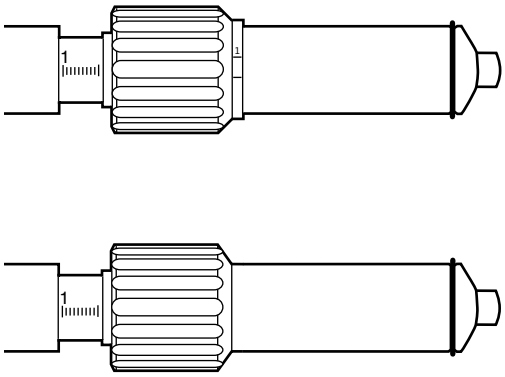

Figure 12

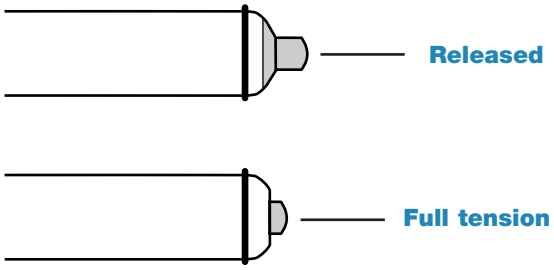

Figure 13

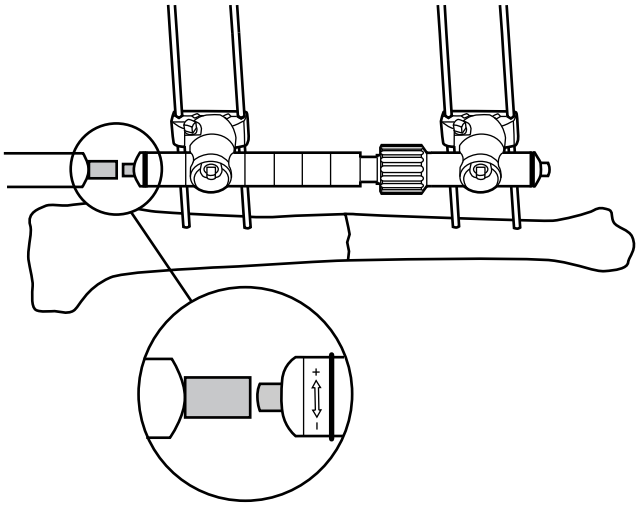

Figure 14

Locking the Dynamisation Features

Finally, and most importantly, be sure that the dynamisation collar is fully closed and that the frame is static before application (Figure 12).

Bio-Spring tension should also be fully released. The Bio-Spring tension adjustment screw is located on the end of the dynamisation segment of the tube. Upon frame application, the spring should be in released position, i.e., turned until silver disc is flush with the end of the tube (Figure 13).

Compression/Distraction

If compression/distraction of the reduction is required after frame application, this can be accomplished by using the internal compression/distraction mechanism. The compression/distraction adjustment nut is located on the end of the lengthening segment of the tube, (+)= distraction and (–)= compression. One complete revolution of the screw provides 1mm of compression or distraction (Figure 14).

The end of the tube is marked with a visual reference each 1/4 turn

●●●● 4 dots	●●● 3 dots
●● 2 dots	● 1 dot

NOTE: When you reduce a fracture with the internal compression/distraction mechanism, please keep the dynamisation collar closed.

Dynamisation Protocol

Dynamic Monotube Triax allows the surgeon to control the dynamisation process with two adjustments:

- The Biocompression Collar allows user to set the amount of micromotion at the fracture site. Although the collar opens to 3mm, it is not recommended to open it more than 1mm (Figure 15)
- The Adjustable Bio-Spring allows the surgeon to vary the amount of weight or force required to make the frame move the distance set on the Biocompression Collar. Chart No 3 highlights the weight required to move each size Monotube based on spring tension (1kg=2.2lb).

Dynamising the Frame

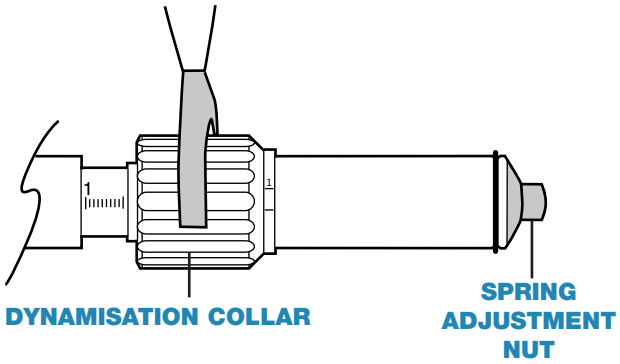

Figure 15

Stable Fracture patterns

Biocompression is recommended for stable fracture patterns. The frame may be dynamised anytime after application. The following steps should be followed:

1. Open the dynamisation collar to 1mm (one complete revolution of the dynamisation collar equates to 1mm). Use the dynamisation wrench if necessary.

Unstable Fracture patterns

Adjustable Bio-Spring is recommended for unstable fracture patterns and leg lengthening. The frame may be dynamised once callus is evident on the X-ray, approximately 21 to 28 days postoperatively. To dynamise the frame, the following sequence should be followed:

1. Advance Adjustable Bio-Spring tension screw clockwise until fully compressed, about 71/2 full turns. The screw will recede into the tube as it compresses the spring.
2. Open the dynamisation collar to one millimetre. Use the dynamisation wrench if necessary.
3. Reduce Bio-Spring tension one full turn anti-clockwise each week. Be sure to check that biocompression collar is still set at 1mm after each spring adjustment. The force required to dynamise the frame will be progressively reduced.

Note: X-ray visualisation is required to determine callus formation.

Carbon Tubes

Chart No 3

Reducing Spring Tension

(Approximate Force Required to Dynamise)

Turns	7 1/2	7	6	5	4	3	2	1	None
Amount of Force (Kilograms)									
Yellow	20	17.33	14.66	11.99	9.32	6.65	3.98	1.31	0
Blue	30	26	22	18	14	10	6	2	0
Red	45	39	33	27	21	15	9	3	0

Operative Technique

Triax Carbon Tubes

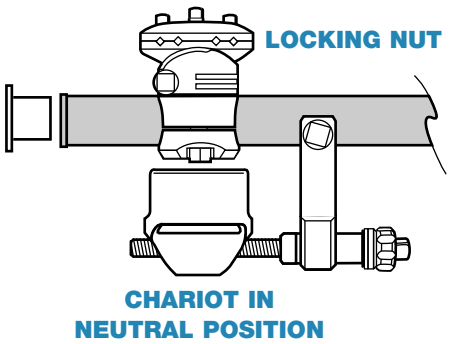

Figure 16

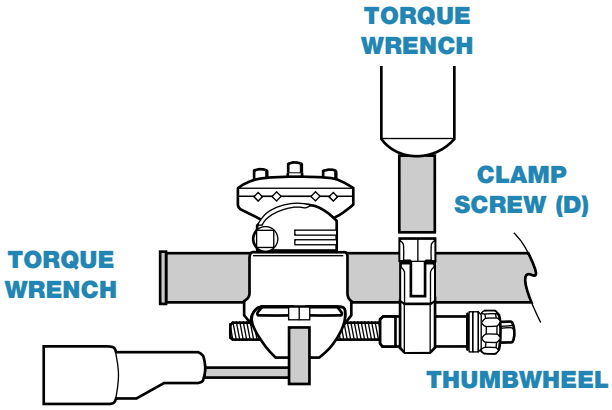

Figure 17

If the fracture does not require dynamisation or if a radiolucent frame is desired, carbon tubes can be substituted for the dynamic tube. Surgical protocol does not vary except for placement of clamps on the tube. To place clamps on the tube, remove coloured end cap. Simply slide clamps onto the tube and replace end caps (Figure 16).

Carbon tubes are available in 3 diameters; Yellow 15, Blue 20, Red 25 and in lengths from 150 – 400mm.

- Compression or distraction can now be achieved – maximum distraction/compression is as follows:

Yellow	20mm
Blue	30mm
Red	30mm.

Compression Distraction Device

The Triax Carbon Tube requires an external compression/distraction device. To use the device, position the "chariot" over the back of the pin clamp and wrap the locking mechanism around the tube. Tighten the locking screw, utilising the wrench. Loosen pin clamp screw (D), utilising torque wrench. Compression or distraction can be useful when fine-tuning the reduction. One revolution of the Thumbwheel provides for 1mm of compression or distraction. The external compression/distraction device can then be removed or left on. In either case, retighten the pin clamp screws to proper torque once finished with adjustment.

Operative Technique

Blunt, Self-tapping Pin Protocol

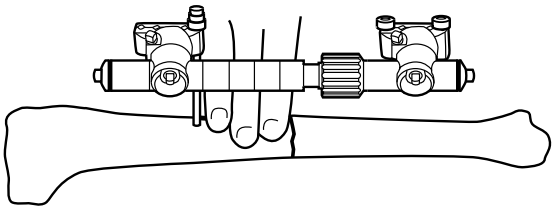

Figure 18

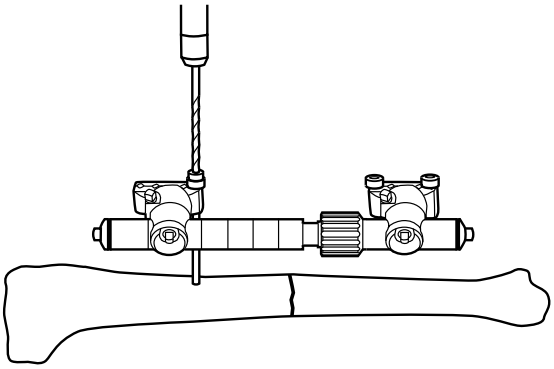

Figure 19

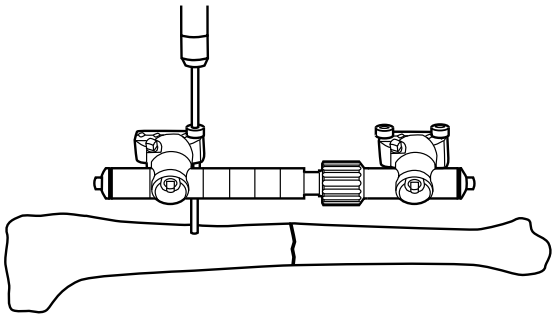

Figure 20

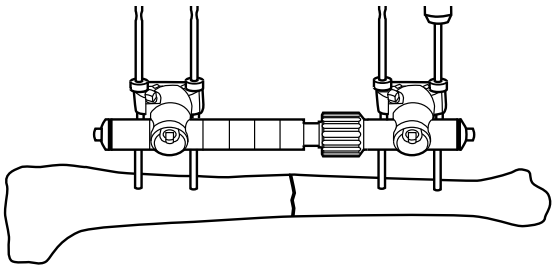

Figure 21

If the surgeon would like to use blunt, self-tapping pins, the pin placement can be facilitated using a triple guide sleeve mechanism and the appropriate drill for the pins being used.

Chart No4

Apex Pin Size	Gray Bone Drill Size	Catalogue No.
3mm	2.2mm	5085-1-222
4mm	3.2mm	5085-2-032
5mm	4.0mm	5085-2-040
6mm	4.5mm	5085-2-045

To place the pins, insert the desired triple drill guide into the pin clamp. The first pin should be placed three fingerbreadths from the fracture. A 1cm longitudinal incision is made with a blunt dissection through the tissue to bone. Insert the Predrill Assembly mechanism through hole No 1 of the proximal clamp (Figure 18). Insert the Predrill Assembly mechanism down to bone, holding it perpendicular to the bone. Lightly tap the trocar, which will prevent skidding of the drill bit. The trocar is removed leaving the drill guide in the tissue protecting sleeve. Introduce the drill bit, and drill through both cortices of the bone (Figure 19). Remove the drill bit and the drill guide sleeve, and insert selected blunt Apex Pin through the tissue sleeve, utilising a Drill Brace or a T-inserter (Figure 20).

Advance pin until both cortices are fully engaged. After placing the first pin, repeat the procedure for the second pin in hole No 4 of the clamp.
Use same technique for second pin clamp and continue with frame application (Figure 21).

Operative Technique

Humeral

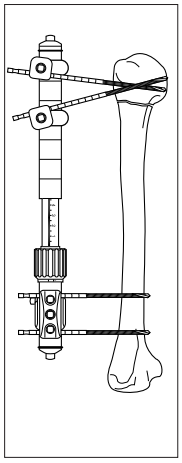
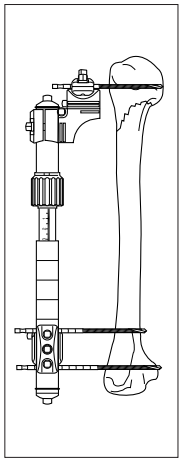
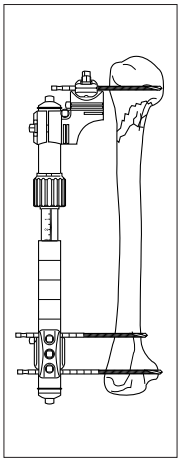

Proximal Humerus

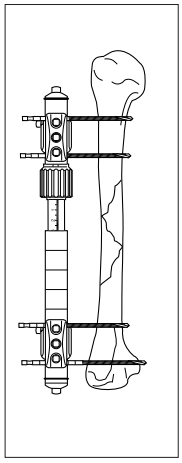
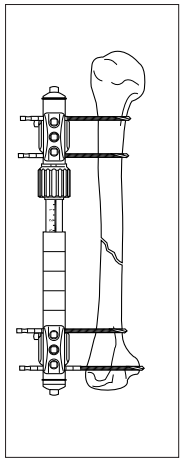
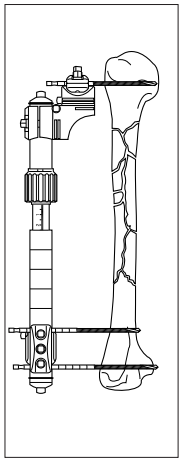

Diaphyseal Humerus

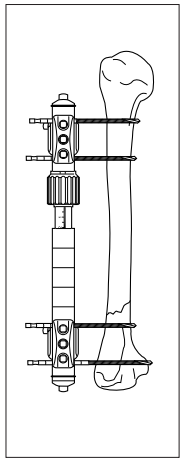

Distal Humerus

Wrist

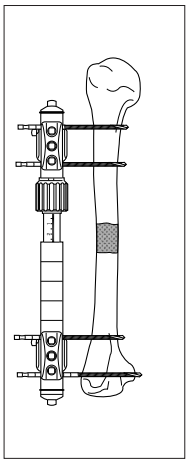

Humeral Lengthening

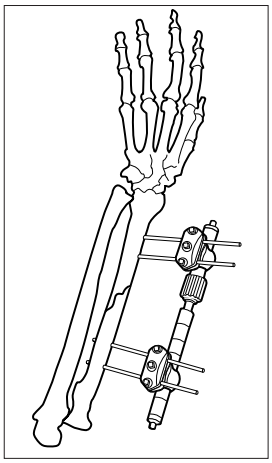

Radial Shaft

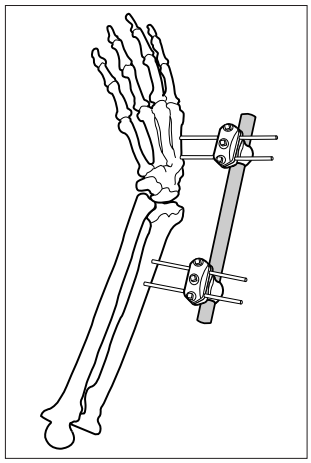

Bridging

Knee Joint

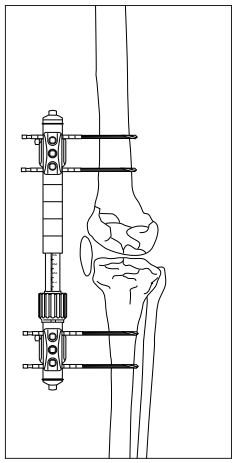

Floating Knee

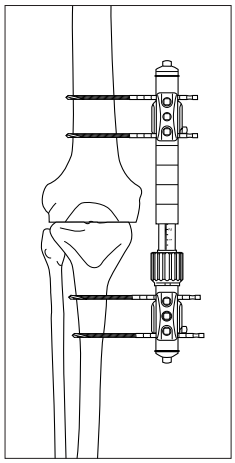

Knee Arthrodesis

Femur

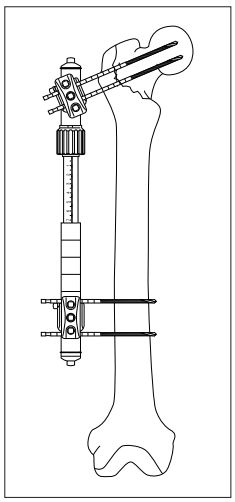

Proximal Femur

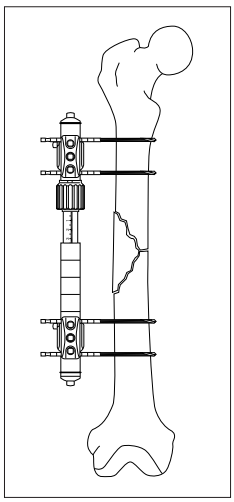

Femoral Shaft

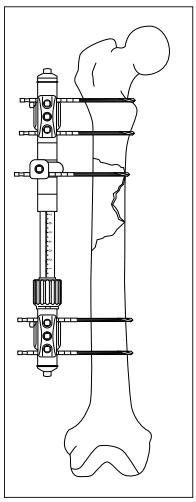
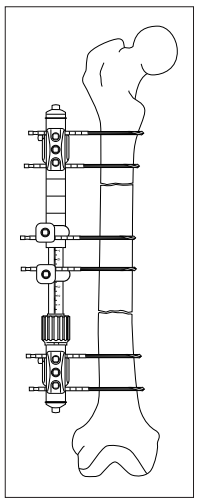
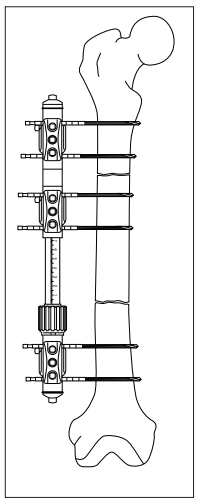

Segmental Femur

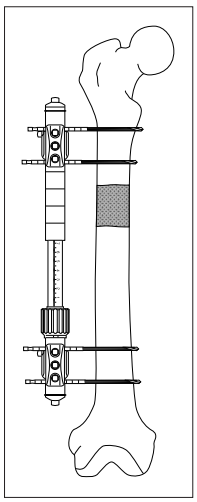

Femoral Lengthening

Operative Technique

Tibial

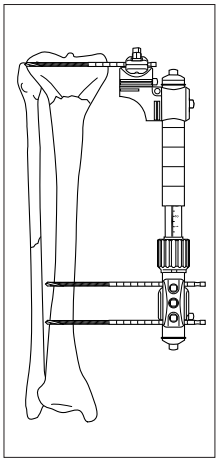

Proximal Tibia

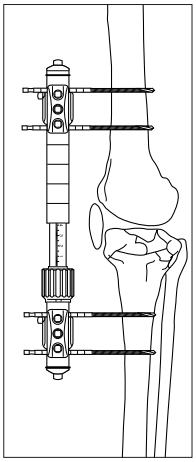

Tibial Plateau

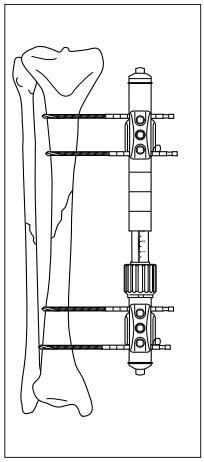

Diaphyseal Tibia*

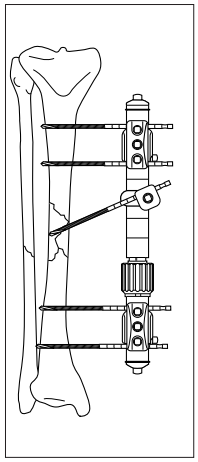

*****

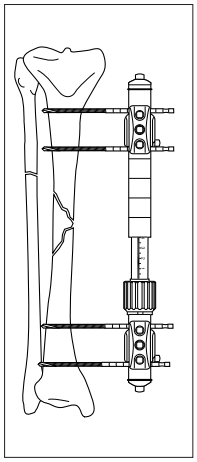

*****

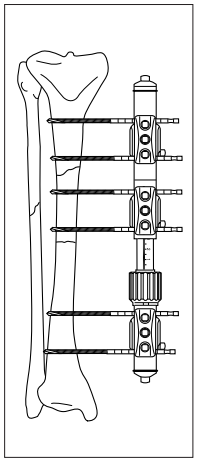

Segmental Tibia

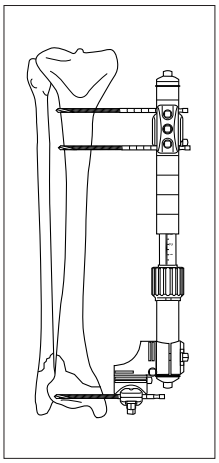

Distal Tibia

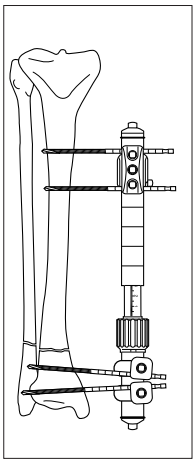

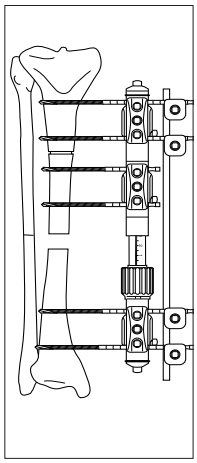

Tibial Bone Transport

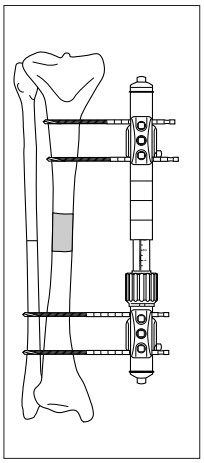

Tibia Lengthening

Hybrid

Proximal Tibia

Ankle

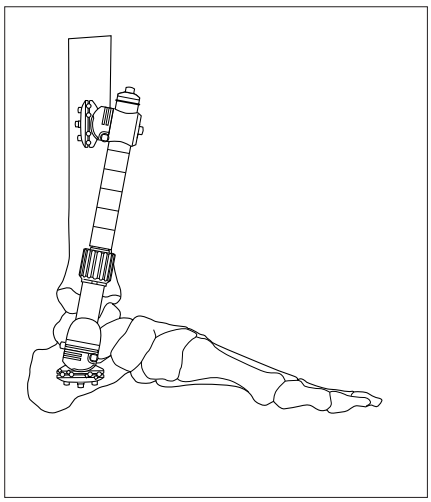

Ankle Fracture

Pelvis

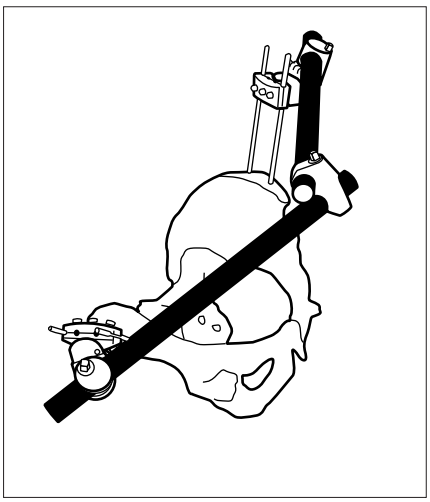

Pelvic Fracture

* May also be placed antero-medial

See page 6 for colour classification.

Ordering Information - Components

REF	Description
5150-0-065	Dynamic Tube Assembly Yellow (15mm)
5150-0-070	Dynamic Tube Assembly Blue (20mm)
5150-0-075	Dynamic Tube Assembly Red (25mm)
5150-0-465	Dynamic Tube Yellow (15mm)
5150-0-470	Dynamic Tube Blue (20mm)
5150-0-475	Dynamic Tube Red (25mm)
5150-3-065	Pin Clamp Yellow (15mm)
5150-3-070	Pin Clamp Blue (20mm)
5150-3-075	Pin Clamp Red (25mm)
5150-3-165	Single Pin Clamp Yellow (15mm)
5150-3-170	Single Pin Clamp Blue (20mm)
5150-3-175	Single Pin Clamp Red (25mm)
5150-4-065	T-Adapter Yellow (15mm)
5150-4-070	T Adapter Blue (20mm)
5150-4-075	T-Adapter Red (25mm)
5150-3-415	Tube-to-Tube Clamp Yellow (15mm)
5150-3-420	Tube-to-Tube Clamp Blue/Blue (20mm)
5150-3-425	Tube-to-Tube Clamp Red/Red (25mm)
5150-3-435	Tube-to-Tube Clamp Yellow (15mm)/Blue (20mm)
5150-3-445	Tube-to-Tube Clamp Blue (20mm)/Red (25mm)

Please refer to the Tenxor Brochure (Cat. Number 5075-3-000) for the components of the Triax Hybrid Frame

5150-1-115	Carbon Tube Assembly Yellow Ø15/150mm
5150-1-120	Carbon Tube Assembly Yellow Ø15/200mm
5150-1-125	Carbon Tube Assembly Yellow Ø15/250mm
5150-1-130	Carbon Tube Assembly Yellow Ø15/300mm
5150-2-371	Carbon Tube Yellow Ø15/150mm
5150-2-381	Carbon Tube Yellow Ø15/200mm
5150-2-391	Carbon Tube Yellow Ø15/250mm
5150-2-396	Carbon Tube Yellow Ø15/300mm
5150-2-431	Carbon Tube Blue Ø20/200mm
5150-2-421	Carbon Tube Blue Ø20/250mm
5150-2-411	Carbon Tube Blue Ø20/300mm
5150-2-401	Carbon Tube Blue Ø20/350mm
5150-2-451	Carbon Tube Red Ø25/250mm
5150-2-461	Carbon Tube Red Ø25/300mm
5150-2-471	Carbon Tube Red Ø25/350mm
5150-2-481	Carbon Tube Red Ø25/400mm

Ordering Information - Instruments

	REF	Description
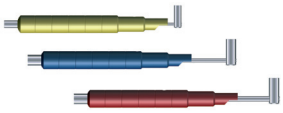	5150-9-265	Long Handle Wrench Yellow
	5150-9-270	Long Handle Wrench Blue
	5150-9-275	Long Handle Wrench Red
	5150-9-585	Reduction Handles Blue/Red Clamps
	5054-8-009	Spanner Wrench
	5150-9-465	Compression Distraction Device Yellow (15mm)
	5150-9-470	Compression Distraction Device Blue (20mm)
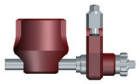	5150-9-475	Compression Distraction Device Red (25mm)
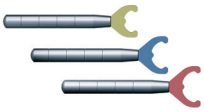	5150-9-115	Dynamisation Wrench Yellow
	5150-9-120	Dynamisation Wrench Blue
	5150-9-125	Dynamisation Wrench Red
	5150-9-916	Monotube Triax Yellow Case
	5150-9-946	Monotube Triax Red/Blue Case

HoffmannII Swiss Patent Application: 01-709/94-3. Other Patents Pending. * Patents: EU 385,929; 374,093; Canada 1,193,506; U.S. 5,160,335 and 5,207,676. ** Swiss Patent Application: 02-709/94-3. Other Patents Pending. *** Patents: EU 230,856; Swiss CH 671,150; U.S. 4,978,350.
†Data on file at Stryker.

Notes

stryker®

- Joint Replacements
- Trauma, Extremities & Deformities
- Craniomaxillofacial
- Spine
- Biologics
- Surgical Products
- Neuro & ENT
- Interventional Pain
- Navigation
- Endoscopy
- Communications
- Imaging
- Patient Handling Equipment
- EMS Equipment

Stryker Trauma AG
Bohnackerweg 1
CH-2545 Selzach
Switzerland

www.osteosynthesis.stryker.com

The information presented in this brochure is intended to demonstrate a Stryker product. Always refer to the package insert, product label and/or user instructions before using any Stryker product. Surgeons must always rely on their own clinical judgment when deciding which products and techniques to use with their patients. Products may not be available in all markets. Product availability is subject to the regulatory or medical practices that govern individual markets. Please contact your Stryker representative if you have questions about the availability of Stryker products in your area.

Stryker Corporation or its subsidiary owns the registered trademark: Stryker, Monotube, Hoffmann, Apex
Stryker Corporation or its subsidiary owns, uses or has applied for the following trademarks: Triax, Tenxor

Literature Number: **5075-2-501**
LOT **A5107**

Copyright © 2007 Stryker

REF NO. 5075-2-501
LOT A5107